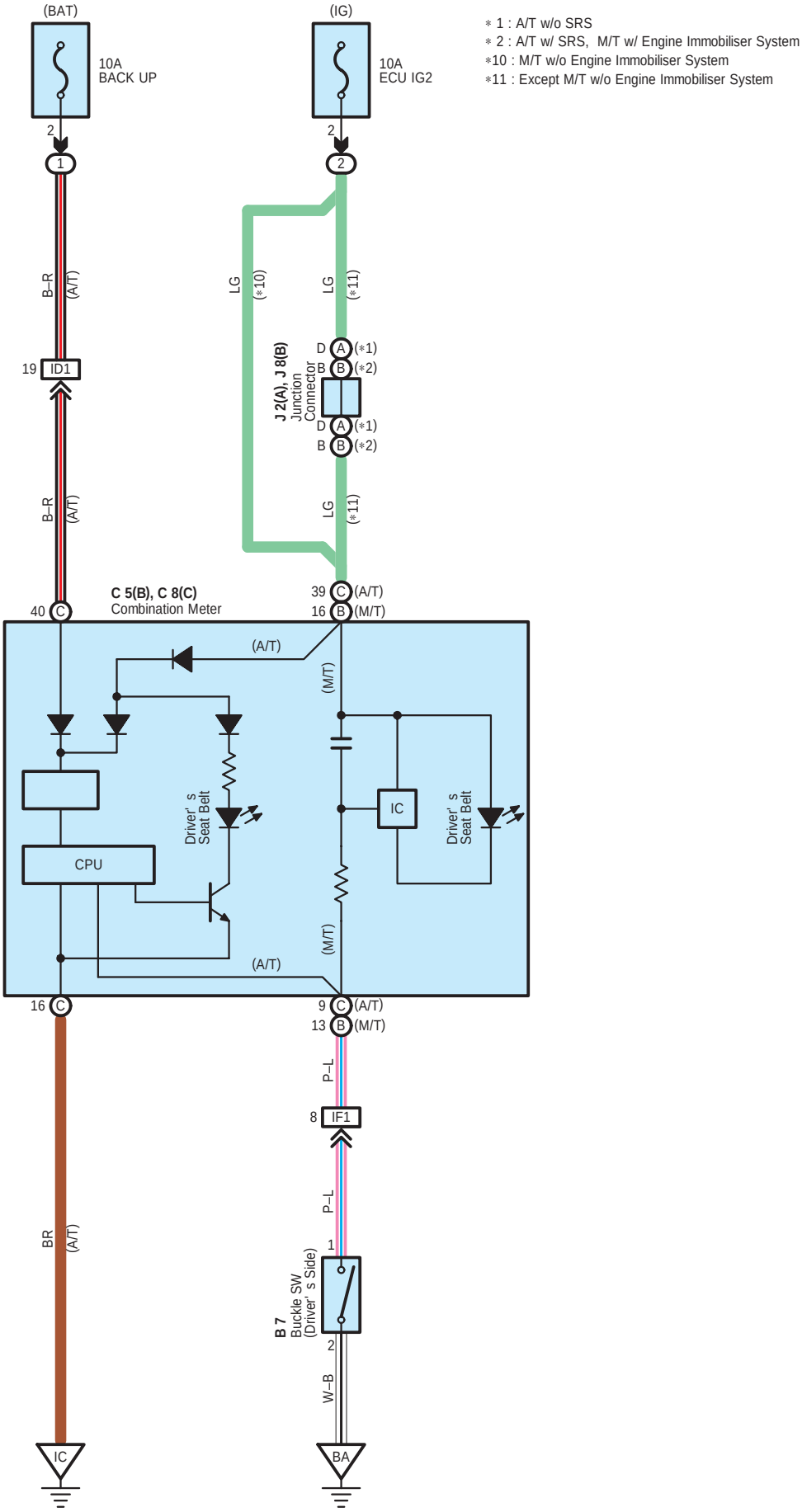
(BAT)
10A
BACK UP
(IG)
10A
ECU IG2
∗ 1 : A/T w/o SRS
∗ 2 : A/T w/ SRS, M/T w/ Engine Immobiliser System
∗10 : M/T w/o Engine Immobiliser System
∗11 : Except M/T w/o Engine Immobiliser System
B–R (A/T)
LG (∗10)
LG (∗11)
19 ID1
J 2(A), J 8(B)
Junction Connector
C 5(B), C 8(C)
Combination Meter
40 C
39 C (A/T)
16 B (M/T)
(A/T)
(M/T)
Driver' s Seat Belt
IC
CPU
16 C
9 C (A/T)
13 B (M/T)
P–L
8 IF1
BR (A/T)
B 7
Buckle SW
(Driver' s Side)
W–B
IC
BA

System Outline

When the driver has not fastened the seat belt while the ignition SW is ON, the driver seat belt warning light blinks.

: Parts Location

Code		See Page	Code		See Page	Code		See Page
B7		30 (LHD)	C5	B	38 (*6)	J8	B	29 (LHD)
		40 (RHD)	C8	C	28 (LHD)			37 (*5)
C5	B	28 (LHD)			38 (*6)			
		36 (*5)	J2	A	39 (*6)			

: Relay Blocks

Code	See Page	Relay Blocks (Relay Block Location)
1	22	Engine Room R/B (Engine Compartment Right)
2	23 (LHD)	Fuse Block (Left Kick Panel)
	23 (RHD)	Fuse Block (Right Kick Panel)

: Connector Joining Wire Harness and Wire Harness

Code	See Page	Joining Wire Harness and Wire Harness (Connector Location)
ID1	44 (LHD)	Engine Room Main Wire and Instrument Panel Wire (Right Kick Panel)
	48 (*5)	Engine Room Main Wire and Instrument Panel Wire (Cowl Side Panel RH)
	49 (*6)	
IF1	44 (LHD)	Instrument Panel Wire and Floor Wire (Left Kick Panel)
	48 (*5)	Instrument Panel Wire and Floor Wire (Right Kick Panel)
	49 (*6)	

: Ground Points

Code	See Page	Ground Points Location
IC	44 (LHD)	Cowl Side Panel LH
	49 (*6)	Right Kick Panel
BA	45 (LHD)	Rear Quarter Panel RH
	50 (RHD)	

* 1 : LHD 3SZ–VE * 2 : LHD K3–VE * 3 : RHD 3SZ–VE * 4 : RHD K3–VE * 5 : RHD w/ Heater * 6 : RHD w/o Heater